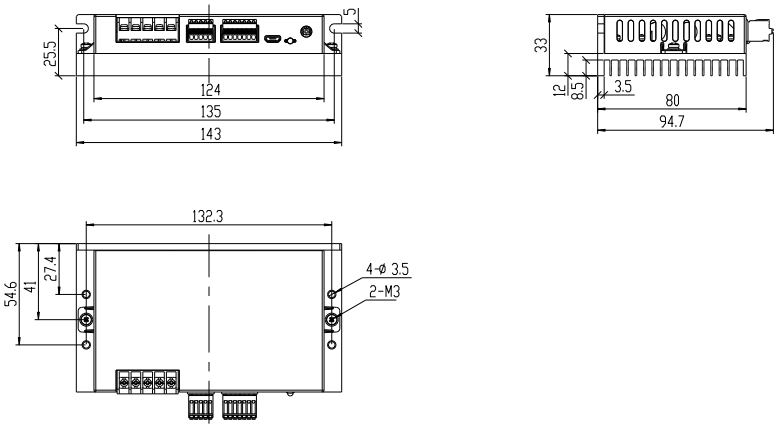
5
25.5
124
135
143
33
12
8.5
3.5
80
94.7
132.3
54.6
41
27.4
4-Ø 3.5
2-M3